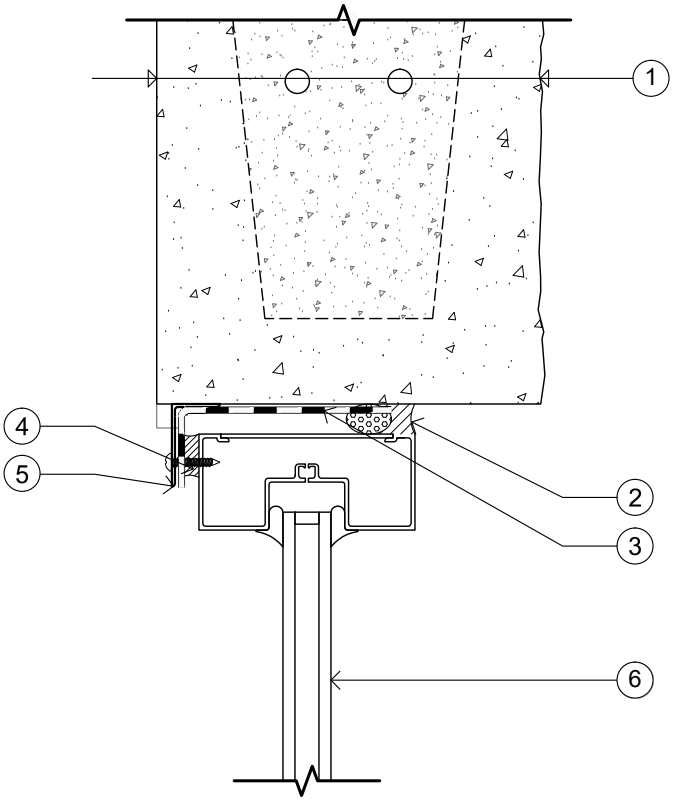
1
2
3
4
5
6

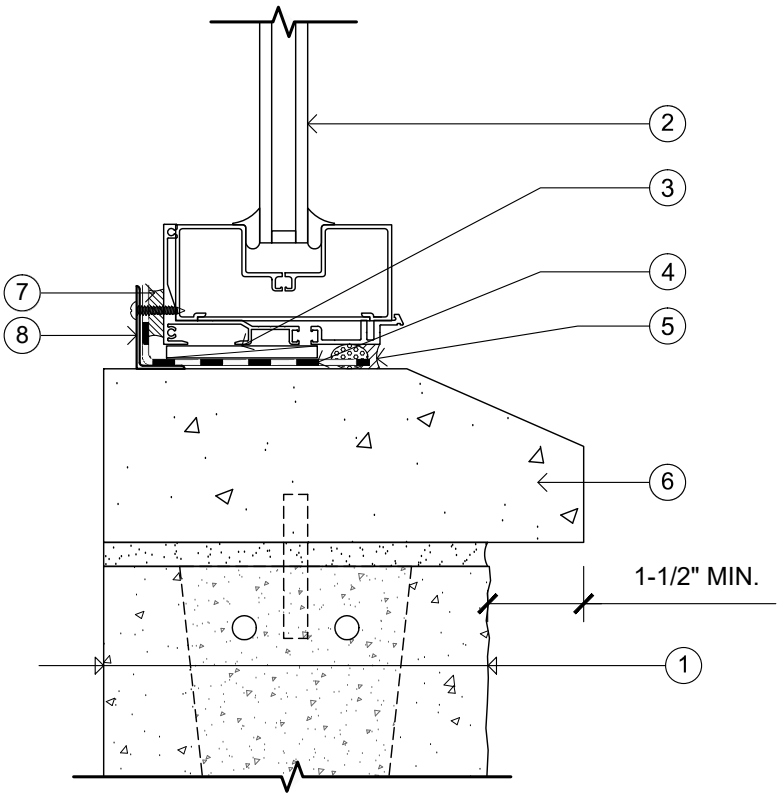
2
3
4
5
6
7
8
1
1-1/2" MIN.

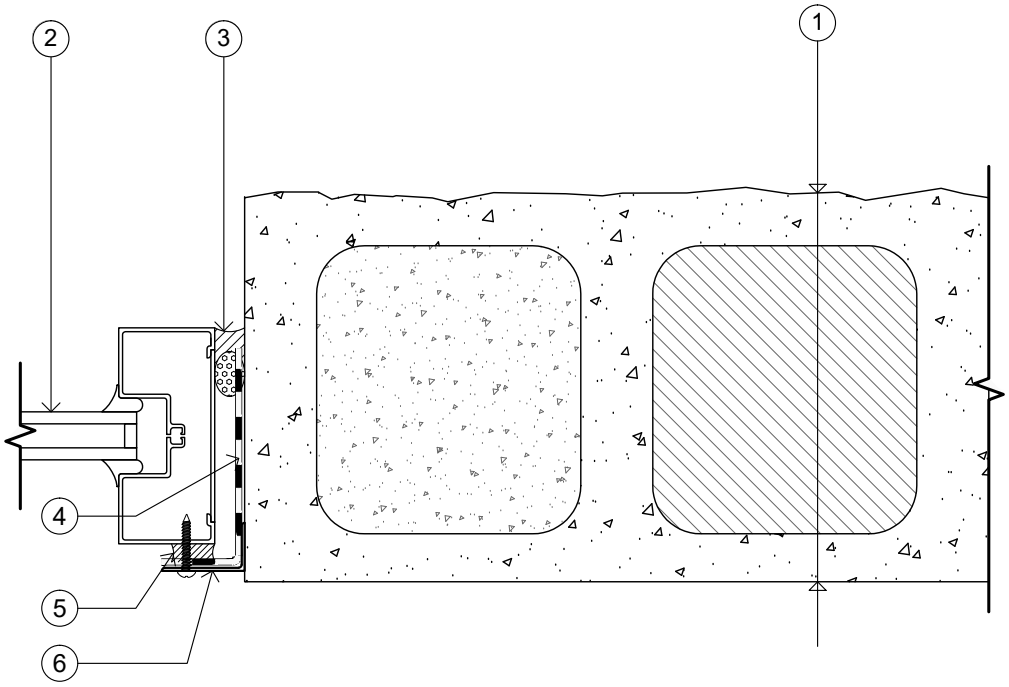
1
2
3
4
5
6

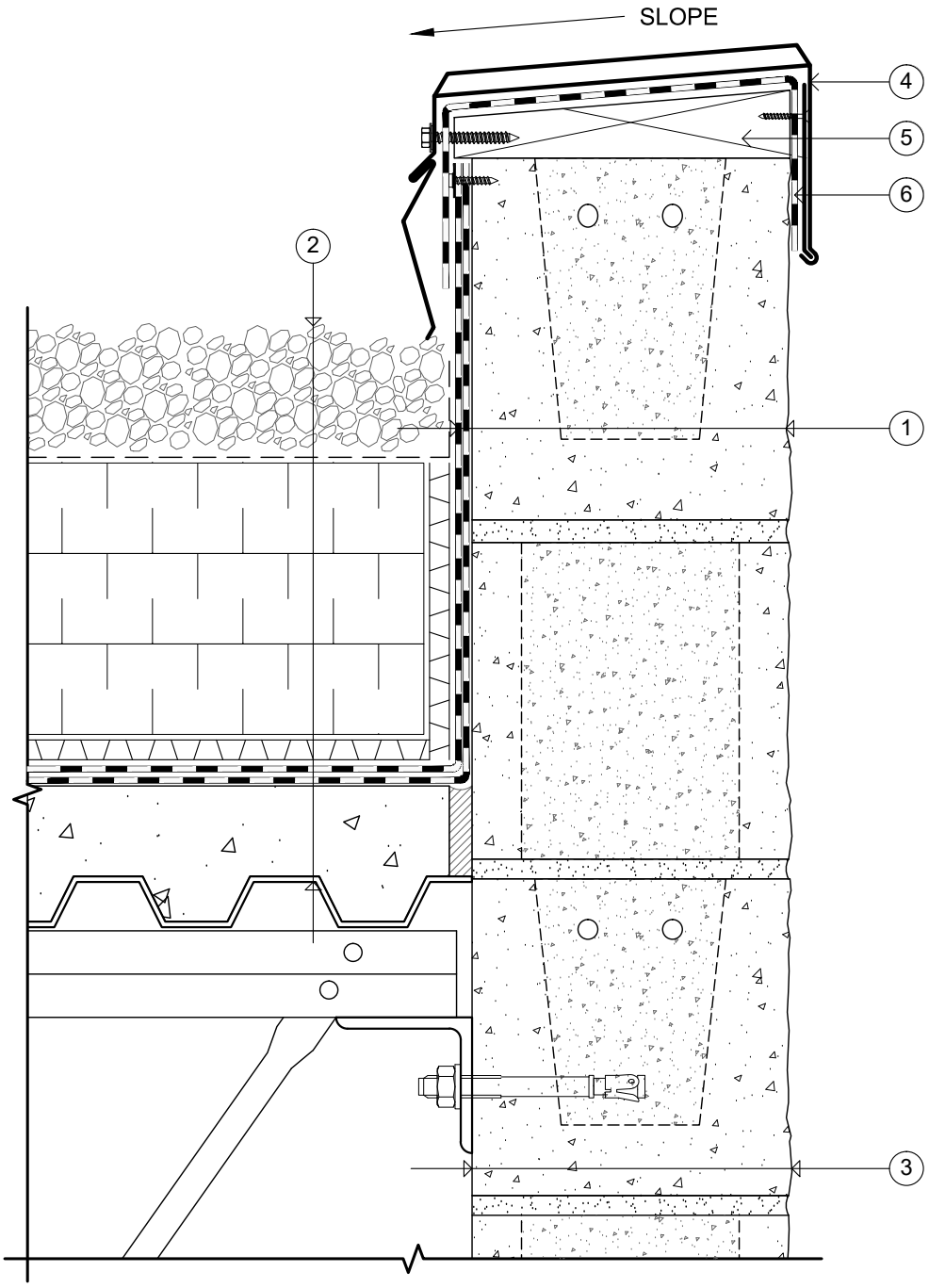
SLOPE
4
5
6
2
1
3

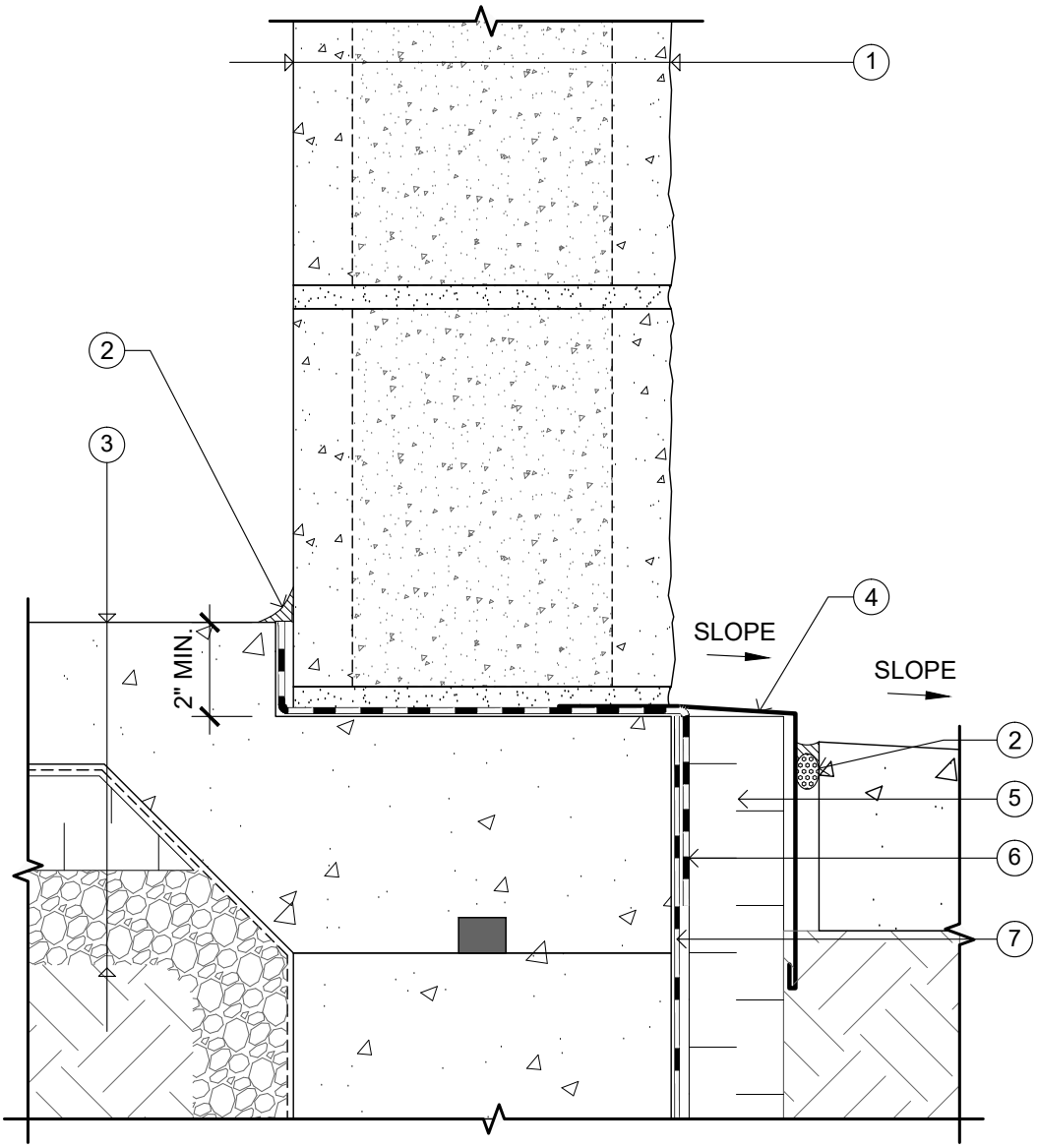
1
2
3
4
SLOPE
SLOPE
2" MIN.
2
5
6
7

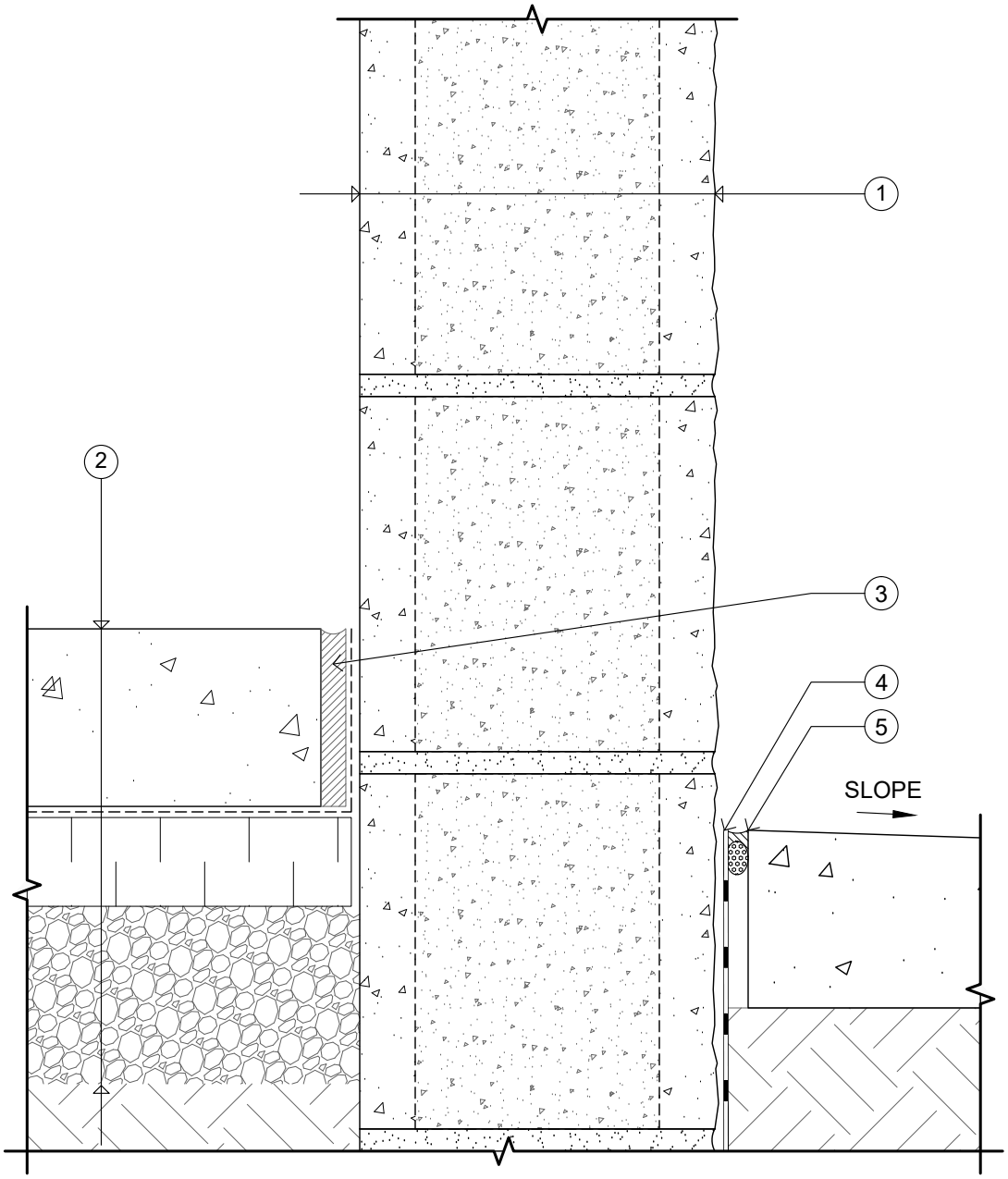
1
2
3
4
5
SLOPE